GREENE COUNTY PLANNING

SUP#26-005 Martin

Home Business Special Use Permit

Planning Commission public hearing

October 21, 2026

Stephanie Golon, Deputy Planning Director

A confectionery home business at 47 William Road

Stony Point Confections

Request for a Special Use Permit for a home business.

Existing shed proposed as the business kitchen.

Applicants: April Martin and Sherry Martin

Owner: Sherry Martin

TMP 65C-1-91, Ruckersville
1.31 acres
Residential R-1

Where the property sits in the county

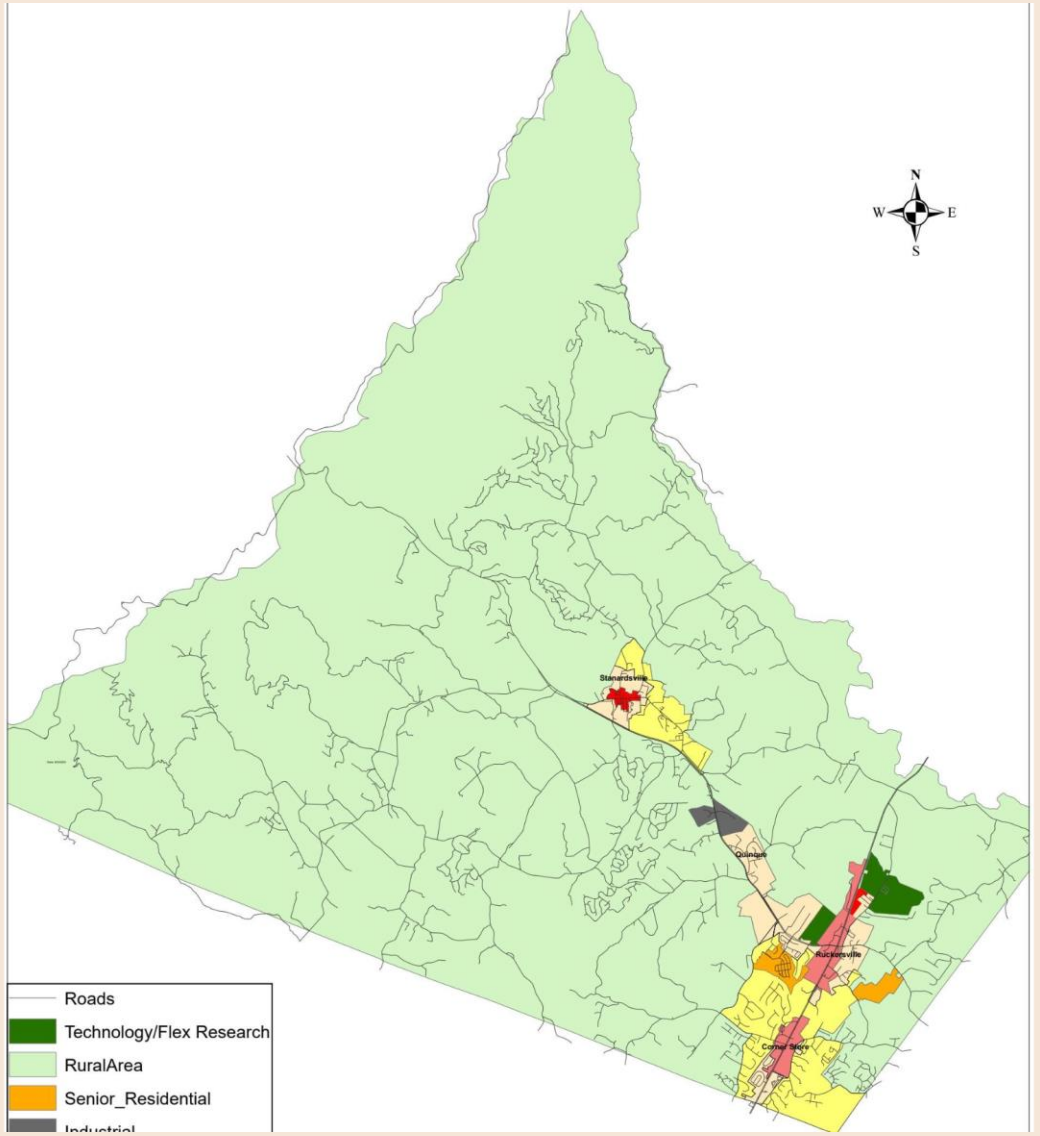

Future Land Use context map: the property is designated Rural Area.

Aerial view of parcel 65C-1-91



County WebGIS parcel aerial, October 15, 2025.

Zoning: Residential R-1

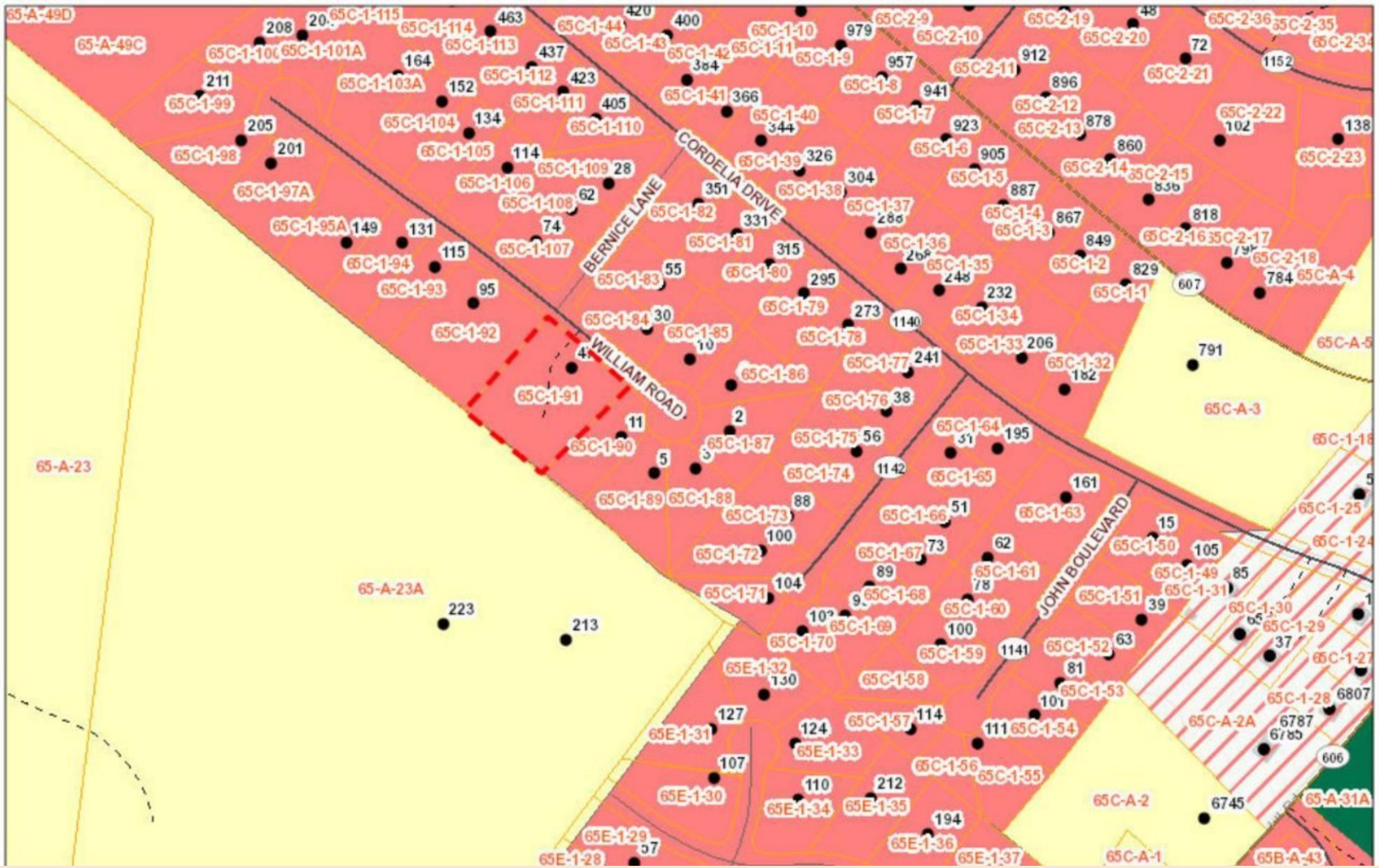

County WebGIS zoning districts map, August 4, 2026.

The shed kitchen is a 219 sq ft production space

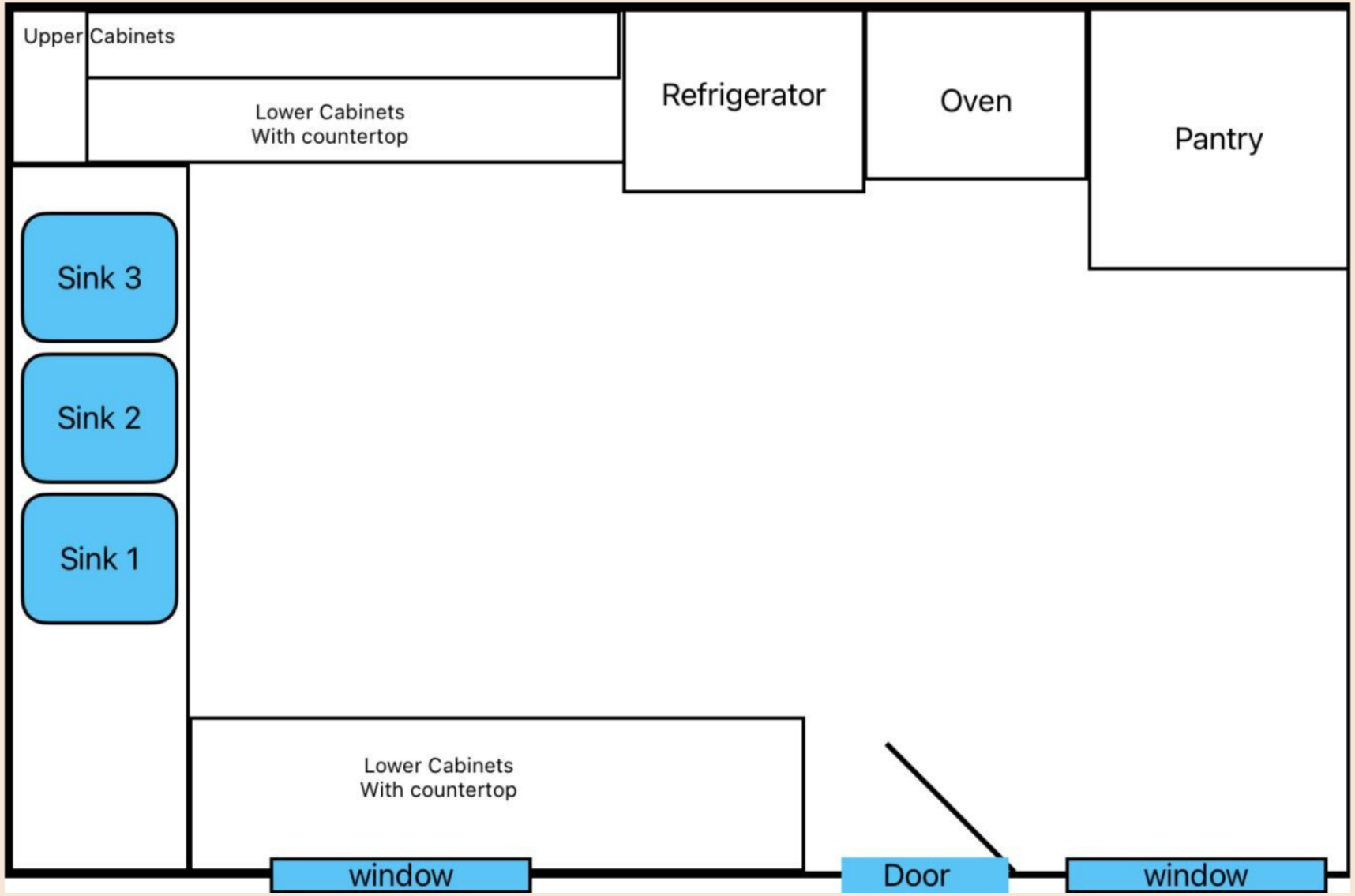

Floor plan: 11'4" by 19'4", with three sinks, oven, refrigerator, pantry, and cabinets.

Production and shipping only, no customer visits

01

Production

Makes candy and confections.

02

Packaging

Packages products for wholesale orders and shipping.

03

Delivery and shipping

All products delivered or shipped; no shopping or pickup at the property.

Applicant says trips are limited to Amazon packages; frequency not quantified.

Review framework: Article 5-1-2.6, 16-2, and 22

Articles 5-1-2.6 and 22

- R-1 permits home businesses by Special Use Permit.
- Article 22 limits preserve residential character.

Article 16-2 tests

- Community character
- Harmony with by-right uses
- Effect on adjacent land and value
- Suitability of the property

The Commission recommends; the Board of Supervisors takes final action.

An existing accessory building fits the Rural Area designation

Rural Area on the Future Land Use Map.

Existing building, no customer visits, and limited exterior impacts support compatibility.

Holds only if the use stays within the approved scope.

Staff analysis: low traffic, final zoning review

Details

Established: building dimensions, setbacks, hours, staffing.

Zoning review will confirm Article 22 compliance before the use begins.

Traffic and parking

- Production model limits customer traffic and parking demand.
- Parking and loading must stay on the property, off William Road.

Agency comments: septic permit and bathroom access still pending

VDH

Existing septic has sufficient capacity. Construction permit issued May 1, 2026. Operation Permit to follow installation and inspection, not yet confirmed.

Building Official · July 20, 2026

Bathroom access required; no customers may visit.

VDOT

No concerns, with no customer visits or large truck traffic.

Staff recommends approval with eight conditions

1. Limited to confectionery production, packaging, delivery, and shipping in the existing building.
2. No customer visits or pickups.
3. VDH Operation Permit documented before operating.
4. Bathroom access and all building approvals before operating.

Conditions 5 through 8 keep the use residential

5. Comply with all Article 22 requirements.

6. Parking and loading on site, no hazard or congestion on William Road.

7. Indoor storage; no exterior noise, glare, odor, or vibration.

8. Expansion or substantial change requires a permit amendment.

The Commission's options

Recommend approval with conditions

The eight conditions, with any modifications.

Recommend approval as submitted

Recommend denial

State reasons.

Defer

Set a date to address named matters.

GREENE COUNTY PLANNING

Questions?

SUP#26-005 Martin | Planning Commission, October 21, 2026